KRAUSMANN
POWER TOOLS

ΔΡΑΠΑΝΟΚΑΤΣΑΒΙΔΟ ΚΡΟΥΣΤΙΚΟ ΕΠΑΝΑΦΟΡΤΙΖΟΜΕΝΟ 20V

CORDLESS IMPACT DRILL & SCREWDRIVER 20V

7251

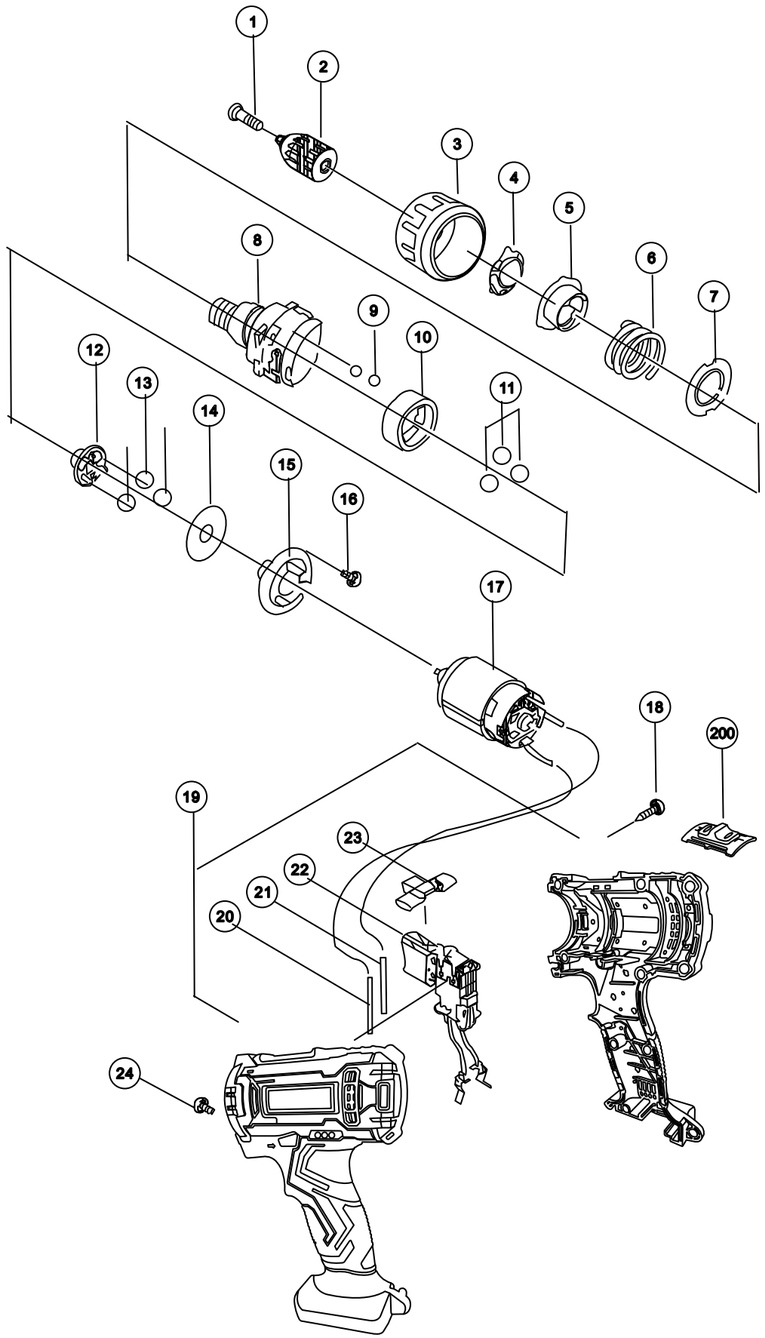

No.	ΚΩΔ.	ΠΕΡΙΓΡΑΦΗ	ΠΟΣ.
1	62938	Screw M5×25	1
2	62939	Drill chuck (1-10mm)	1
3	-	Clutch dial	1
4	-	Ring	1
5	-	Nut	1
6	-	Spring	1
7	-	Washer A	1
8	-	Gear case	1
9	-	Steel ball (diameter 4mm)	16
10	-	Ring gear	1
11	-	Planet gear A	3
12	-	Pinion	1
13	-	Planet gear B	3
14	-	Washer B	1
15	-	Motor spacer	1
16	-	Screw set	3
17	62940	Motor	1
18	-	Tapping screw	8
19	62941	Chassis	1
20	-	Wire	1
21	-	Wire	1
22	62942	DC-speed control switch	1
23	62943	Pushing button	1
24	-	Screw	1
200	62944	Button	1