KRAUSMANN POWER TOOLS

ΠΙΣΤΟΛΙ ΘΕΡΜΟΥ ΑΕΡΑ 2000W

HOT AIR GUN 2000W

9326

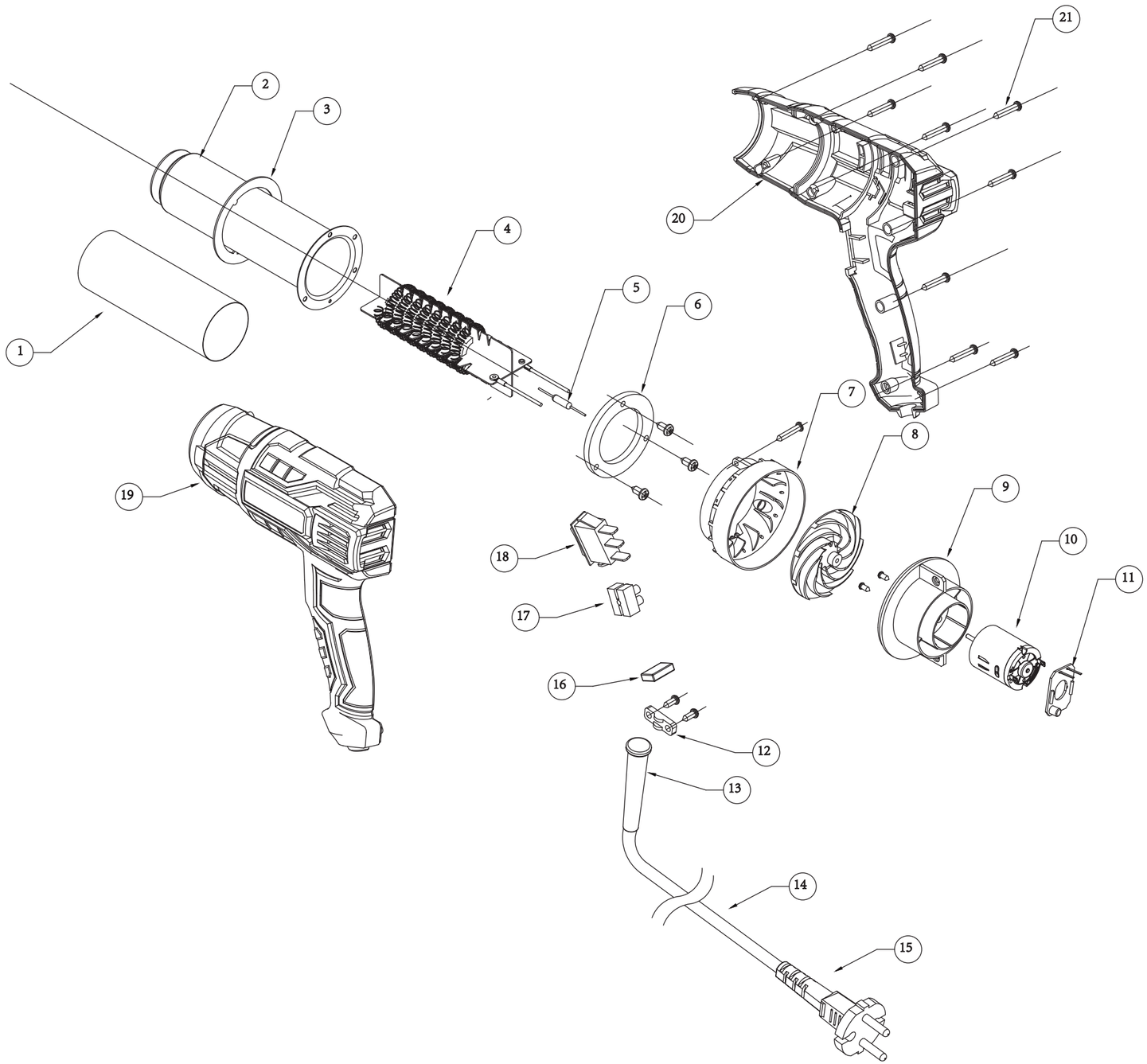

No.	ΠΕΡΙΓΡΑΦΗ
1	Mica
2	Wind tube
3	Ring
4	Heating wire
5	Thermal link
6	Gasket
7	Support
8	Wind fan
9	Motor support
10	Motor
11	PCB
12	PCB
13	Cord Tube
14	Supply cord
15	Plug
16	Capacitor
17	Terminal block
18	Switch PCB
19	Left enclosure
20	Right enclosure
21	Screw